ISO FULL BLEED A3 420 X 297 MM

PRINTED ON ___% POST-CONSUMER RECYCLED CONTENT PAPER

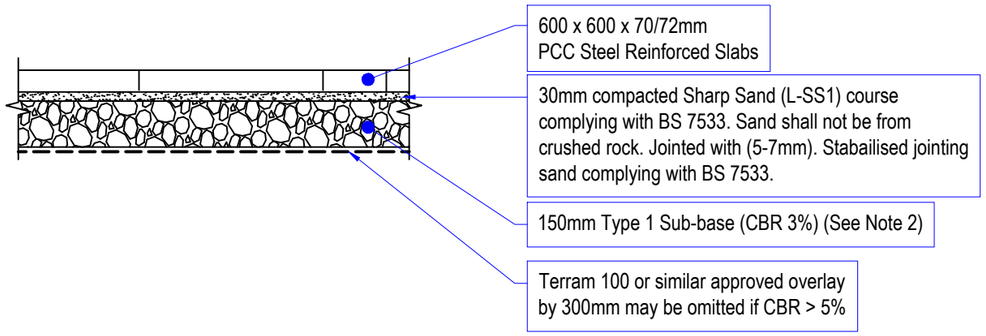

FOOTWAY - VEHICLE OVERRUN

SCALE 1:20 [A3]

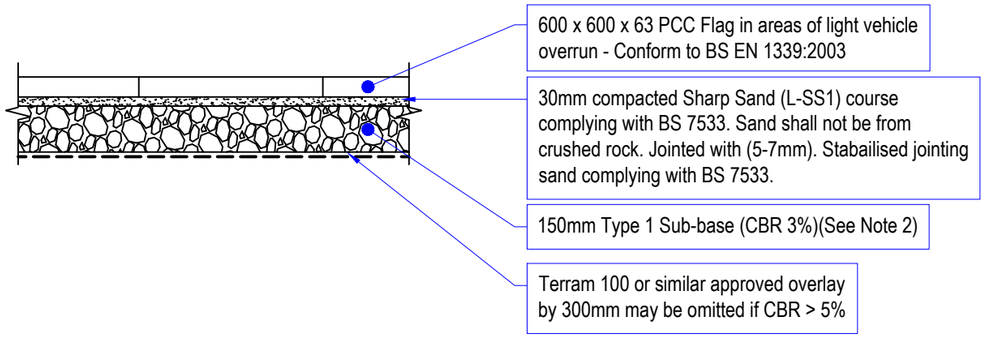

FOOTWAY PCC FLAG - LIGHT VEHICLE OVERRUN

SCALE 1:20 [A3]

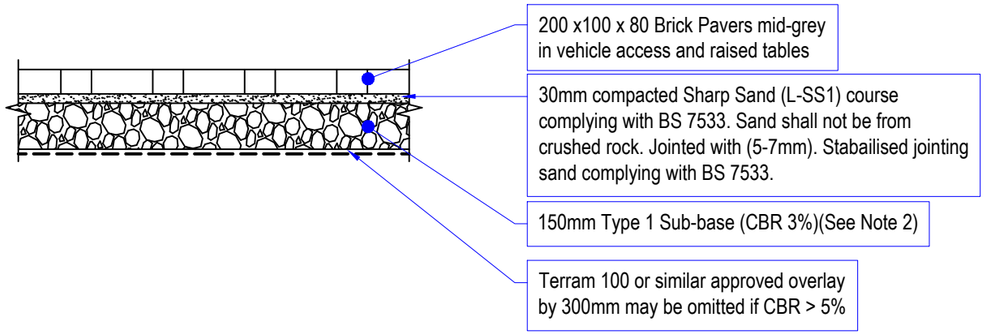

FOOTWAY BRICK PAVERS - VEHICLE ACCESS & RAISED TABLES

SCALE 1:20 [A3]

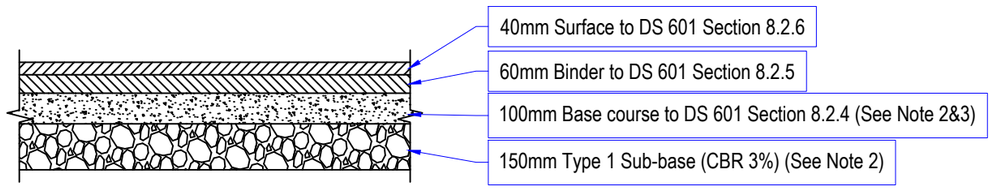

BITUMINOUS CARRIAGEWAY

SCALE 1:20 [A3]

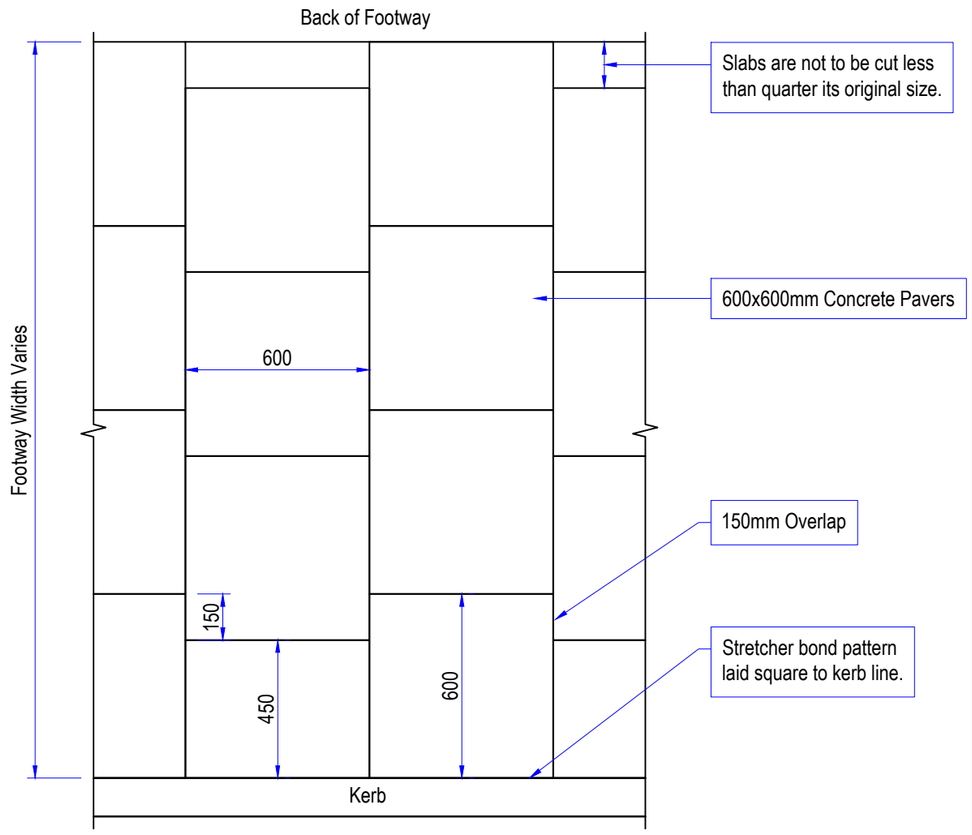

FLAG PAVERS LAYOUT PATTERN

SCALE 1:20 [A3]

CBR TABLE

CBR	≤ 2%	3%	4%	5%	≥ 6%
Min Type 1 Sub-base	200 mm	150 mm	125 mm	100 mm	100 mm

NOTES

1. All dimensions are in Millimeters
2. Carriageway Construction may vary depending on the existing construction and/or CBR values.
3. Base course construction varies according to traffic volumes

REV	DATE	REVISION DESCRIPTION / DETAILS	DRN BY	CHKD BY	APRVD BY

Southwark Council
southwark.gov.uk
160 TOOLEY STREET LONDON SE1P 5LX

PROJECT:
SOUTHWARK STREETSCAPE
DESIGN MANUAL
STANDARD DETAILS

TITLE:
PAVEMENT CONSTRUCTION - GENERAL
AREA SPECIFICATION

STATUS: DRAFT		DRAWN	SR
		DESIGNED	-
SCALE: 1:20 [A3]		CHECKED	-
		APPROVED	-
DRAWING NO: LBS/700/04		REV: -	
DATE DRAWN: AUGUST 2017	DATE ISSUED: XX MONTH 20XX		

C:\USERS\LNS0R\ONEDRIVE - OPUS INTERNATIONAL CONSULTANTS LTD-SOUTHWARK COUNCIL STANDARD DETAILS\TECH DRW\SERIES 700\PAVEMENT SDW\LBS-700-04-08-PAVEMENT DETAILS.DWG