ISO FULL BLEED A3 420 X 297 MM
PRINTED ON ___% POST-CONSUMER RECYCLED CONTENT PAPER

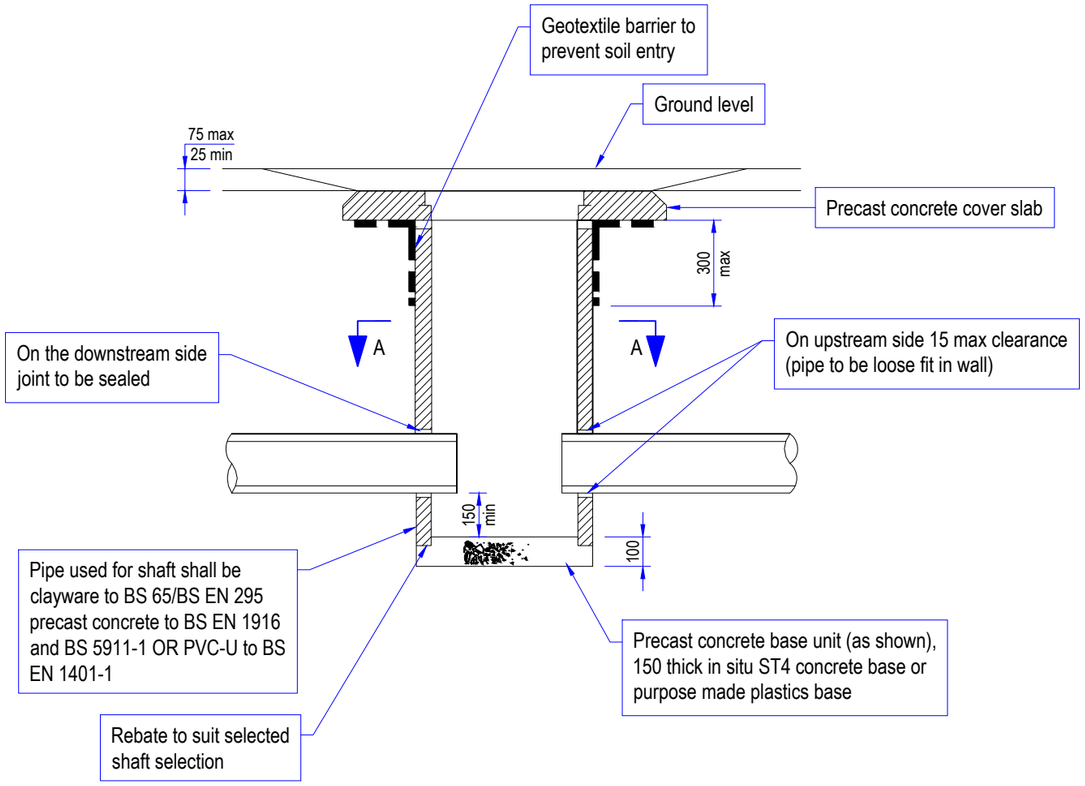

SECTION THROUGH CATCHPIT

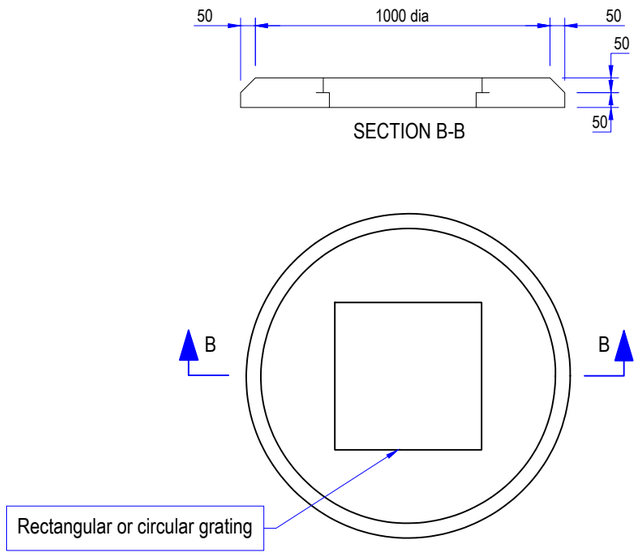

SECTION B-B

DETAILS OF COVER SLAB

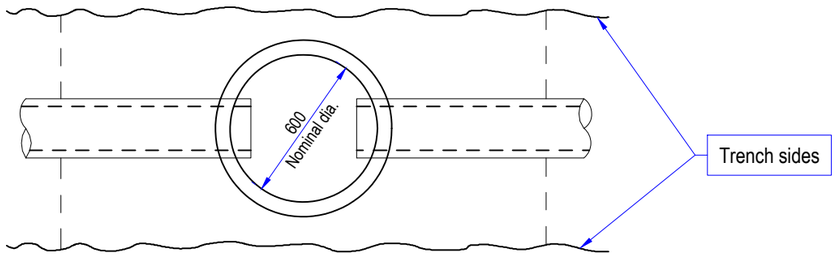

SECTION A-A

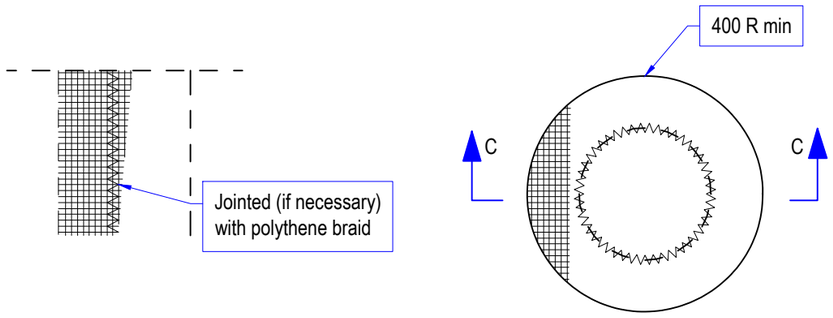

SECTION C-C

PLAN

DETAILS OF GEOTEXTILE BARRIER

NOTES

1. All dimensions are in millimeters.
2. Gully top shall comply with BS EN 124. Grating to have minimum waterway area of 0.125m² and to withstand BS EN 124 test load.
3. Invert details are shown on the drawings.
4. Purpose made plastics upper sections with pre-fitted gratings to Note 2 may be used. Plastics upper sections shall be surrounded with ST4 concrete to SHW, Clause 2602. Dimensions shown for precast slab.
5. Sub-Clause 507.15 of the SHW need not be applied.

REV	DATE	REVISION DESCRIPTION / DETAILS	DRN BY	CHKD BY	APRVD BY

Southwark Council
southwark.gov.uk
160 TOOLEY STREET LONDON SE1P 5LX

PROJECT:
SOUTHWARK STREETSCAPE
DESIGN MANUAL
STANDARD DETAILS

TITLE:
TYPE 8 CHAMBER
(600 CATCHPIT)

STATUS: DRAFT		DRAWN	SR
		DESIGNED	-
SCALE: N.T.S.		CHECKED	GL
		APPROVED	-
DRAWING NO: LBS/500/11		REV: R0	
DATE DRAWN: JULY 2017	DATE ISSUED: 19 Feb 2017		

S:\HIGHWAYS MAINTENANCE\SSDM\02-SSDM_CONTENT_ARCHIVE\REVISION OF SSDM\TECH DRWS\STD DETAILS\SERIES 500 DRAINAGE & SERVICE DUCTS\DWG\LBS-500-11 TYPE 8 CHAMBER (600 CATCHPIT).DWG